Table G Solubility Curves At Standard Pressure

1 Based on Table G, which compound has the greatest solubility in 100. grams of water at 10.°C?

(1) HCl (3) KCl
(2) NaCl (4) NH_4Cl

2 Based on Table G, which compound is less soluble in water as the temperature increases from 0°C to 100°C?

(1) KNO_3 (3) $KClO_3$
(2) NH_3 (4) NH_4Cl

3 Based on Table G, which solute sample in 100.g of water at 40.°C can produce a solution equilibrium in a closed system?

(1) 10. g $KClO_3$ (3) 45 g KCl
(2) 25 g NaCl (4) 55 g KNO_3

Base your answers to questions 4 on the information below.

Ammonium chloride is dissolved in water to form a 0.10 M $NH_4Cl(aq)$ solution. This dissolving process is represented by the equation below.

$$NH_4Cl(s) + \text{heat} \xrightarrow{H_2O} NH_4^+(aq) + Cl^-(aq)$$

4 Determine the minimum mass of $NH_4Cl(s)$ required to produce a saturated solution in 100. grams of water at 40.°C.

Base your answers to questions 5 on the information below and on your knowledge of chemistry.

The compounds KNO_3 and $NaNO_3$ are soluble in water.

5 Compare the boiling point of a $NaNO_3$ solution at standard pressure to the boiling point of water at standard pressure.

Base your answers to questions 6 on the information below and on your knowledge of chemistry.

Baking soda, $NaHCO_3$, can be commercially produced during a series of chemical reactions called the Solvay process. In this process, $NH_3(aq)$, NaCl(aq), and other chemicals are used to produce $NaHCO_3(s)$ and $NH_4Cl(aq)$.

To reduce production costs, $NH_3(aq)$ is recovered from $NH_4Cl(aq)$ through a different series of reactions. This series of reactions can be summarized by the overall reaction represented by the unbalanced equation below.

$$NH_4Cl(aq) + CaO(s) \rightarrow NH_3(aq) + H_2O(\ell) + CaCl_2(aq)$$

6 Determine the mass of NH_4Cl that must be dissolved in 100. grams of H_2O to produce a saturated solution at 70.°C.

Base your answers to questions 7 on the information below and on your knowledge of chemistry.

In a laboratory investigation, a student is given a sample that is a mixture of 3.0 grams of NaCl(s) and 4.0 grams of sand, which is mostly SiO_2(s). The purpose of the investigation is to separate and recover the compounds in the sample. In the first step, the student places the sample in a 250-mL flask. Then, 50. grams of distilled water are added to the flask, and the contents are thoroughly stirred. The mixture in the flask is then filtered, using the equipment represented by the diagram below.

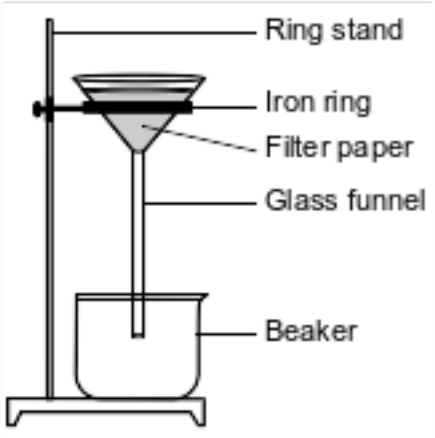

7 Based on Table G, state evidence that all of the NaCl(s) in the flask would dissolve in the distilled water at 20.°C.

8 What is the mass of KNO_3(s) that must dissolve in 100. grams of water to form a saturated solution at 50.°C?

9 Determine the mass of KNO_3 that dissolves in 100. grams of water at 40.°C to produce a saturated solution.

Base your answers to questions 10 on the information below and on your knowledge of chemistry.

A solution is made by dissolving 70.0 grams of KNO_3(s) in 100. grams of water at 50.°C and standard pressure.

10 Determine the number of additional grams of KNO_3 that must dissolve to make this solution saturated.

11 Using Table G, determine the minimum mass of NaCl that must be dissolved in 200. grams of water to produce a saturated solution at 90.°C.

Base your answers to questions 12 on the information below and on your knowledge of chemistry.

A saturated solution of sulfur dioxide is prepared by dissolving SO_2(g) in 100. g of water at 10.°C and standard pressure.

12 Based on Table G, state the general relationship between solubility and temperature of an aqueous SO_2 solution at standard pressure.

Base your answers to questions 13 on the information below and on your knowledge of chemistry.

A 100.-gram sample of liquid water is heated from 20.0°C to 50.0°C. Enough $KClO_3(s)$ is dissolved in the sample of water at 50.0°C to form a saturated solution.

13 Based on Table G, determine the mass of $KClO_3(s)$ that must dissolve to make a saturated solution in 100. g of H_2O at 50.0°C.

Base your answers to questions 14 on the information below and on your knowledge of chemistry.

A sample of normal rainwater has a pH value of 5.6 due to dissolved carbon dioxide gas from the atmosphere. Acid rain is formed when other gases, such as sulfur dioxide, dissolve in rainwater, which can result in lake water with a pH value of 4.6. The equation below represents the reaction of water with $SO_2(g)$.

$$H_2O(\ell) + SO_2(g) \rightarrow H_2SO_3(aq)$$

14 Based on Table G, describe what happens to the solubility of $SO_2(g)$ as the temperature increases from 10.°C to 30.°C at standard pressure. [1]

Answer Keys

1 1

2 2

3 3

4 Allow 1 credit for 47 g ± 1 g.

5 Allow 1 credit. Acceptable responses include, but are not limited to:
- The boiling point of the $NaNO_3$ solution is higher than the boiling point of water.
- lower for H_2O

6 Allow 1 credit for any value from 61 g to 63 g, inclusive.

7 Allow 1 credit. Acceptable responses include, but are not limited to:
- According to Table G, the salt solution is unsaturated.
- The 3.0 g of salt dissolved in 50. g of H_2O has a concentration less than the solubility of NaCl on Table G at 20.°C.
- Table G indicates that the solubility of NaCl is greater than the amount in the sample.

8 Allow 1 credit for 84 g ± 2 g.

9 Allow 1 credit for 64 g, or any value from 62 g to 66 g, inclusive.

10 Allow 1 credit for any value from 12 g to 16 g, inclusive.

11 Allow 1 credit for any value from 78 g to 82 g inclusive.

12 Allow 1 credit. Acceptable responses include, but are not limited to:
- The solubility at 1 atm increases as the temperature decreases.
- As the temperature of the solution increases, the solubility of SO_2 decreases.
- At lower temperatures, more SO_2 can dissolve.

13 Allow 1 credit for any value from 20. g to 23 g, inclusive.

14 Allow 1 credit. Acceptable responses include, but are not limited to:
- As the water temperature increases, the solubility of sulfur dioxide decreases.
- The solubility of SO_2 decreases.
- The $SO_2(g)$ becomes less soluble.